comer industries driveshafts

End fittings		Max. torque
Tractor	Cod: C12	–
Implement	Cod: RF6	1400 Nm – 12398 in.lb.

Notes:

CE CERTIFIED

Warning !
Sections of driveline marked ⚠ are not shielded and must be shielded by an interactive guarding system.
COMER spa declines responsibility if proper guards are not provided or maintained.

Features

Series:	T
Type:	60
Code:	07.695.077.10
Description:	T600910ENC12RF6
Customer's code:	–
Colour:	Yellow

Last drawing

Index: – Date: –

Application

–

Driveline data

X	1 3/8" Z6 DIN 9611
Y	1 3/8" Z6 DIN 9611
E	750–29.53"
I	765–30.12"
P	680–26.77"

Overlap

	Steel tubes	Guard
Max.	717–28.23"	660–25.98"
Min.	280–11.02"	223–8.78"

Greasing point

1)	–
2)	–

The dimensioning is cross to cross

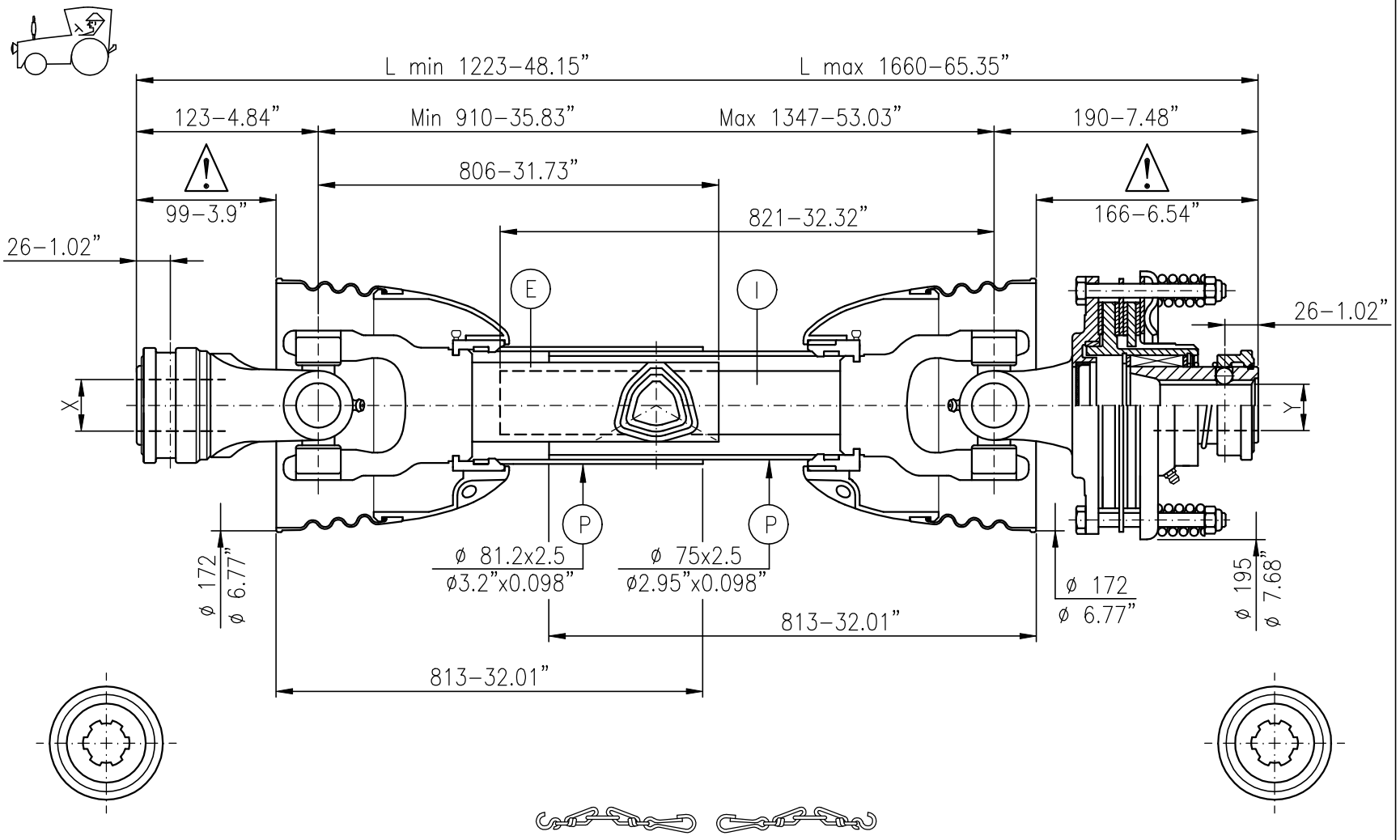

Cross and tubes

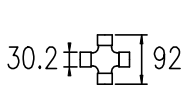

54x4

45x4

Data 540 r.p.m.				Data 1000 r.p.m.				1100 min.$^{-1}$ r.p.m. max.
KW	CV	Nm.	in.lb.	KW	CV	Nm.	in.lb.	
47	64	830	7350	74	100	710	6259	

Continuous operation data and conditions,working angle 5°, average life 1000 hours

Data for only critical velocity	
540 r.p.m.	1000 r.p.m.
Max. –	Max. –
L max. –	L max. –
Checked:	Signed by: F.L.

Customer: – –

Date: 02–04–12